infrasave

IL Series

Economical High Intensity Heater

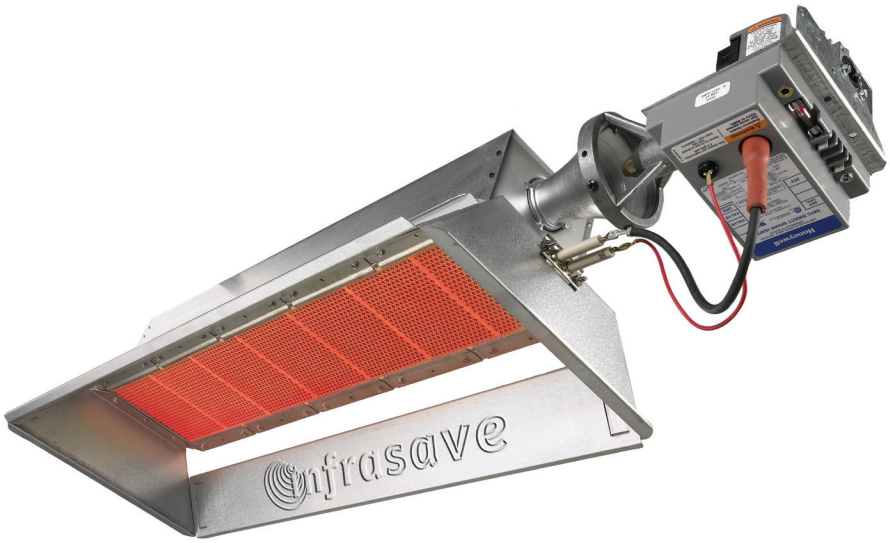

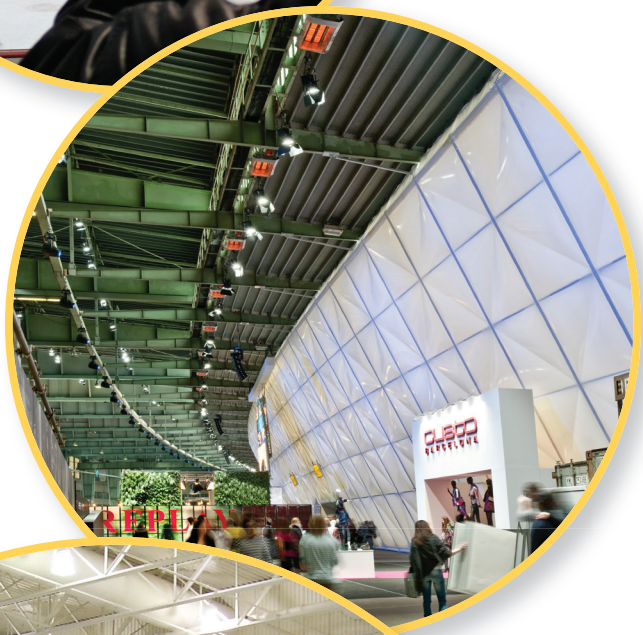

Economy, Efficiency, and Performance

IL Series is the most economical choice for any high intensity heater. It delivers uniform and reliable comfort to industrial and commercial facilities with high ceilings from 16 to 70 feet. Full operating temperature is reached within 2 minutes making it the ideal choice for supplying total building heat, spot heating, and work level heating.

The unique and patented ceramic tile design of the **IL Series** increases radiant efficiency and reduces fuel cost up to 50% over conventional heating systems and is suitable for industrial and commercial applications.

Experience Counts: Infrasave is the worldwide market leader and most trusted brand with over 2 million heating appliances sold.

Features

- Aluminized steel burner housing to resist corrosion and withstand high temperature
- Green technology: fuel costs and CO2 emissions reduced up to 50%
- Direct spark ignition ensures ultimate safety and fuel economy

Optional Accessories See back for more details.

- TruTemp
- Lion Chain
- Flexible Gas Connector

Also Available in double burner model

Contact us today for a FREE design and quote!

1-877-446-3727 | csr@infrasave.com | www.infrasave.com

IL Series – Economical High Intensity Heater

Information below is intended only as a reference and should not be used when installing equipment. Please ensure you locate the most recent instruction manual for accurate and up to date information.

Clearances to Combustibles

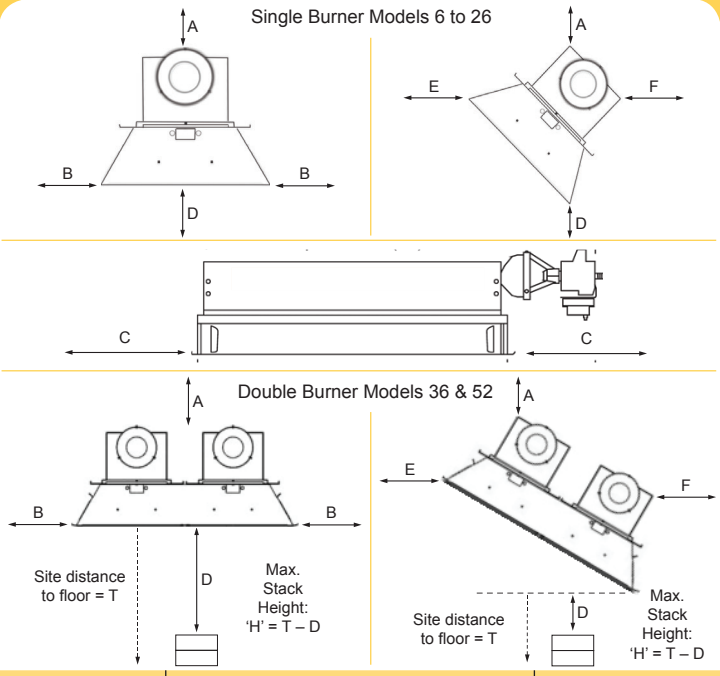

MODEL	SUSPENDED HORIZONTALLY				SUSPENDED AT AN ANGLE UP TO 30°	
	A	B	D	C	E	F
IL 25	24"	27"	60"	24"	60"	24"
IL 37	24"	27"	60"	24"	60"	24"
IL 50	24"	27"	78"	24"	78"	24"
IL 75	30"	33"	84"	30"	84"	30"
IL 100	36"	33"	84"	30"	84"	30"
IL 150*	52"	55"	121"	39"	84"	55"
IL 200*	52"	55"	121"	39"	84"	55"

*Double Burner Models

Dimensions and Specifications

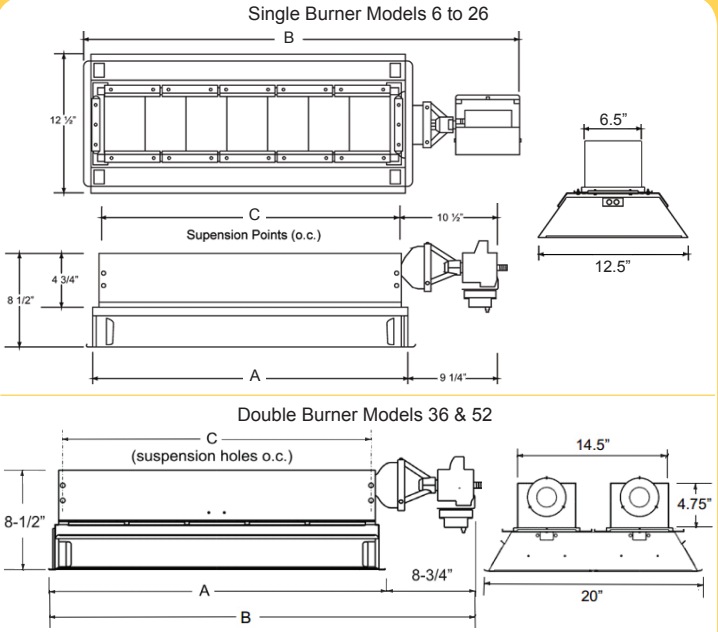

MODEL	DIMENSIONS			INPUT BTU/HR	WEIGHT LBS.	ELECT.
	A	B	C			
IL 25	13.50"	24"	11.28"	21,500	22	24 VAC 60 Hz 0.55 A
IL 37	20.50"	30.25"	15.50"	35,000	26	
IL 50	28.00"	38.50"	18.50"	50,000	31	
IL 75	38.75"	48.50"	29.5"	65,000	38	
IL 100	53.25"	63.75"	44"	100,000	45	
IL 150*	39.75"	48.50"	36.50"	143,000	65	
IL 200*	54.25"	63.00"	51.00"	200,000	75	

*Double Burner Models

Optional Accessories

Flexible Gas Connector 1/2" x 24"	JL-0771-XX
#2 Lion Chain, roll 200'	JL-0800-XX
Safety Snap Hooks 2" - Package of 24	JL-0800-SH
Safety Snap Hooks 2" - Package of 100	JL-0800-SH-B

Consult your local authorized dealer for other Infrasave accessories:
- Line-voltage and 24V thermostat and controls
- Side reflector extensions

Heater Controls & Thermostats

TruTemp

Infrared Setback Thermostat

- Setback reduces control temperature by 9°F [13°C] when a building is unoccupied
- Setback is activated at night time by turning off lights
- Mounts on standard 4" [10cm] electrical box or directly to wall
- Tamper-proof option

Other Thermostats Available

- Line voltage control
- 24 Vac Control
- Moisture resistant controls
- 2-stage thermostatic control

IL Series Installation Manual | IL-X 150-200 Installation Manual | IL Series Replacement Parts List

Distributor Information:

Our customers include:

Tel: 1-877-446-3727 I Fax: 1-866-361-0523 I www.infrasave.com I csr@infrasave.com

M020915 RL: v1.3 RD: Mar-2019