infrasave
radiant heaters

# ITB Series

## Commercial/Industrial Tube Heater

## Efficiency, economy and performance in one package

One of the most economical radiant tube heaters on the market for heating distribution and production facilities. Built using Infrasave's low cost heating system design, the **ITB Series** energy efficient heater provides comfort and a quick payback period.

**Also Available in 2-Stage [SET] Model**

Infrasave 2-Stage builder series heater adjusts heat output to meet changing heating needs. This heater lowers energy consumption and increases equipment life by reducing ON-OFF cycles by up to 35%.

**Experience Counts:** Infrasave is the worldwide market leader and most trusted brand with over 2 million heating appliances sold.

Also Available in Pre-Assembled U-Tube P40 Model

## Features

- Line voltage and 24 volt thermostat ready
- Whisper-Jet technology makes heater extremely quiet
- Easy access to "clamshell" burner box
- Reflector & end caps improve IR heat

**Optional Accessories** See back for more details.

- Air Intake Wall Cap
- Horizontal Flue Vent Terminal
- Elbow Kit

**Contact us today for a FREE design and quote!**

**1-877-446-3727 | csr@infrasave.com | www.infrasave.com**

# ITB Series – Technical Specifications, Controls, & Accessories

Information below is intended only as a reference and should not be used when installing equipment. Please ensure you locate the most recent instruction manual for accurate and up to date information.

## Clearances to Combustibles

### ITB Straight Tube System

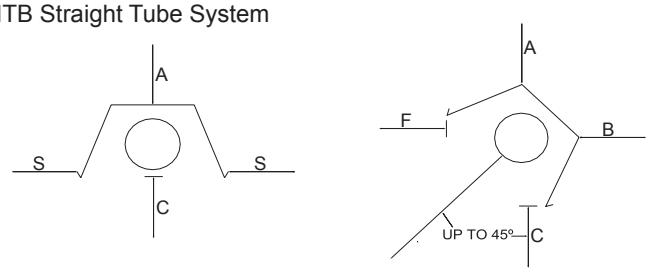


### *P40U Packaged U-Tube

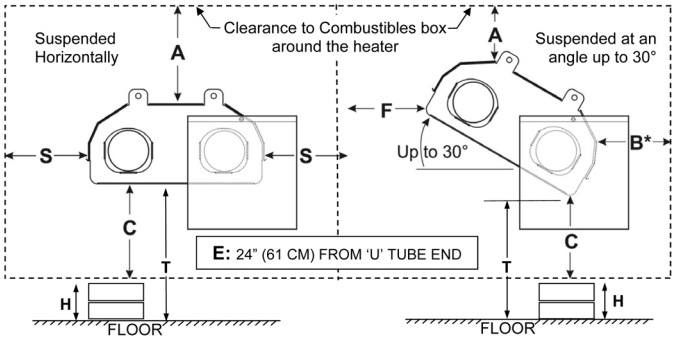


| MODEL | SUSPENDED HORIZONTALLY | | | SUSPENDED AT AN ANGLE UP TO 45° | | | |
|---|---|---|---|---|---|---|---|
| | A | S | C | A | B | F | C |
| ITB 200 (U) | 14" | 44" | 76" | 13" | 6" | 74" | 70" |
| ITB 175 (U) | 13" | 42" | 74" | 12" | 6" | 72" | 68" |
| ITB 155 (U) | 11" | 34" | 70" | 10" | 4" | 50" | 64" |
| ITB 130 (U) | 10" | 32" | 65" | 10" | 3" | 45" | 60" |
| ITB 110 (U) | 9" | 30" | 60" | 9" | 3" | 36" | 54" |
| ITB 100 | 11" | 32" | 68" | 10" | 4" | 57" | 68" |
| ITB 80 (U) | 7" | 24" | 42" | 7" | 2" | 31" | 38" |
| ITB 60 (U) | 7" | 20" | 34" | 7" | 2" | 25" | 34" |
| ITB 45 (U) | 7" | 16" | 32" | 7" | 2" | 29" | 32" |
| P40U-I* | 12" | 24" | 55" | 12" | 12" | 36" | 55" |

## Flexible Layout

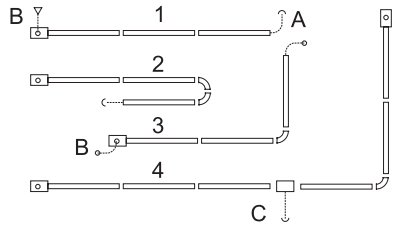


**System Configuration**

1. Straight line
2. "U" tube with two 90° elbow kits
3. "L" tube with 90° elbow kit
4. Common 6" TEE flue vent

**Venting Options**

A. 4" flue vent through wall or roof
B. 4" intake air from wall or roof
C. 6" common vent through wall or roof

Distributor Information:

## Dimensions and Specifications

### ITB Straight Tube System

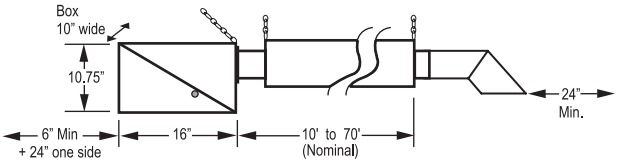


### *P40U Packaged U-Tube

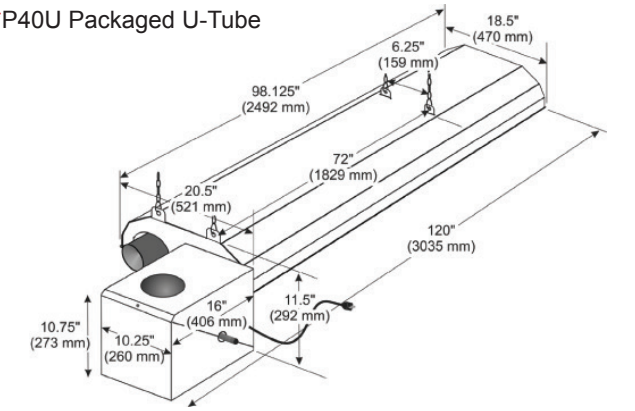


| MODEL | INPUT BTU/HR U.S.A.* SEA LEVEL TO 2,000' CANADA*: SEA LEVEL TO 4,500' | AVAILABLE LENGTH | | | | | | |
|---|---|---|---|---|---|---|---|---|
| | | 10' | 20' | 30' | 40' | 50' | 60' | 70' |
| ITB 200 (U) | 200,000 | | | | | ▪ | ▪ | ▪ |
| ITB 175 (U) | 175,000 | | | | | ▪ | ▪ | ▪ |
| ITB 155 (U) | 155,000 | | | | ▪ | ▪ | ▪ | |
| ITB 130 (U) | 130,000 | | | ▪ | ▪ | ▪ | | |
| ITB 110 (U) | 110,000 | | | ▪ | ▪ | ▪ | | |
| ITB 100 | 100,000 | | ▪ | | | | | |
| ITB 80 (U) | 80,000 | | ▪ | ▪ | ▪ | | | |
| ITB 60 (U) | 60,000 | | ▪ | ▪ | | | | |
| ITB 45 (U) | 45,000 | | ▪ | | | | | |
| P40U-I* | | ▪ | | | | | | |
| HEATER LENGTH | | 10' 0" | 21' 0" | 30' 8" | 40' 4" | 50' 0" | 59' 8" | 69' 4" |
| SHIPPING WEIGHT [LBS.] | | 100 | 150 | 200 | 240 | 315 | 360 | 430 |

*HIGH ALTITUDE: De-rate heater 4% for each additional 1,000 Ft. of elevation

| | | | |
|---|---|---|---|
| Gas pressure | Line minimum: | 5" W.C. NG | 11" W.C. LP |
| | Line maximum: | 14" W.C. NG | 14" W.C. LP |
| | Manifold: | 3.5" W.C. NG | 10" W.C. LP |
| Gas inlet | 1/2" | | |
| Flue & air vent | 4" | | |
| Electrical | 120V, 60 Hz, 1.5 AMPS | | |

## Optional Accessories

| | |
|---|---|
| Fresh air intake wall cap | JS-0532-VC |
| 4" Horizontal flue vent terminal (wall) | JA-0528-XX |
| 90° Elbow kit with reflector cap (Combine with two 90° to create 180° elbow) | JS-0508-JZ |
| #2 Lion chain | JL-0800-XX |

**Consult your local authorized dealer for other Infrasave accessories:**

- Line-voltage and 24V thermostat and controls
- Side reflector extensions

Installation Manual | Replacement Parts List | P40U-I Installation Manual | Find a Distributor

Tel: 1-877-446-3727 I Fax: 1-866-361-0523 I www.infrasave.com I csr@infrasave.com

M020615 RL: v1.9 RD: Nov-2015